IECEx Certificate of Conformity

INTERNATIONAL ELECTROTECHNICAL COMMISSION
IEC Certification System for Explosive Atmospheres

for rules and details of the IECEx Scheme visit www.iecex.com

Certificate No.:	**IECEx BAS 20.0007X**	Page 1 of 4	Certificate history:
Status:	**Current**	Issue No: 2	Issue 1 (2024-06-04) Issue 0 (2020-10-13)
Date of Issue:	2025-11-19		

Applicant: **Chemelex Belgium NV**
Research Park
Haasrode - Zone 2
Romeinse straat 14
Leuven B-3001
Belgium

Equipment: **FMT & FHT Trace Heating Systems**

Optional accessory:

Type of Protection: **Electrical resistance – Trace Heating**

Marking: **FMT:**

Ex 60079-30-1 IIC T* Gb
Ex 60079-30-1 IIIC T°C Db**
Tmin -40°C

FHT:

Ex 60079-30-1 IIC T* Gb
Ex 60079-30-1 IIIC T°C Db**
Tmin -60°C

(*/ see schedule)**

Approved for issue on behalf of the IECEx Certification Body: **D Brearley**

Position: **Lead Certification Engineer**

Signature: (for printed version)



Date: (for printed version) 19/11/2025

1. This certificate and schedule may only be reproduced in full.
2. This certificate is not transferable and remains the property of the issuing body.
3. The Status and authenticity of this certificate may be verified by visiting www.iecex.com or use of this QR Code.

Certificate issued by:

SGS UK Limited
Rockhead Business Park
Staden Lane
Buxton, Derbyshire SK17 9RZ
United Kingdom

IECEx Certificate of Conformity

Certificate No.: **IECEx BAS 20.0007X**

Date of issue: 2025-11-19

Issue No: 2

Manufacturer: **Chemelex Belgium NV**
Research Park
Haasrode - Zone 2
Romeinse straat 14
Leuven B-3001
Belgium

Manufacturing locations: **Chemelex Belgium NV**
Research Park
Haasrode - Zone 2
Romeinse straat 14
Leuven B-3001
Belgium

This certificate is issued as verification that a sample(s), representative of production, was assessed and tested and found to comply with the IEC Standard list below and that the manufacturer's quality system, relating to the Ex products covered by this certificate, was assessed and found to comply with the IECEx Quality system requirements.This certificate is granted subject to the conditions as set out in IECEx Scheme Rules, IECEx 02 and Operational Documents as amended

STANDARDS :
The equipment and any acceptable variations to it specified in the schedule of this certificate and the identified documents, was found to comply with the following standards

IEC 60079-0:2017 Edition:7.0	Explosive atmospheres - Part 0: Equipment - General requirements
IEC/IEEE 60079-30-1:2015 Edition:1.0	Explosive atmospheres - Part 30-1: Electrical resistance trace heating - General and testing requirements

This Certificate **does not** indicate compliance with safety and performance requirements other than those expressly included in the Standards listed above.

TEST & ASSESSMENT REPORTS:
A sample(s) of the equipment listed has successfully met the examination and test requirements as recorded in:

Test Reports:

GB/BAS/ExTR20.0027/00 GB/SGS/ExTR24.0068/00

Quality Assessment Report:

GB/BAS/QAR07.0053/11

IECEx Certificate of Conformity

EQUIPMENT:
Equipment and systems covered by this Certificate are as follows:

The FMT and FHT Trace Heating Systems are parallel circuit constant power density heating cables, rated at up to 415V, with nominal power outputs from 10W/m to 40W/m. The maximum maintain temperature for the types FMT and FHT are 150°C and 230°C respectively.

The heating cables consist of two stranded nickel-plated copper 1.5mm2 conductors, each insulated with 0.4mm minimum thickness fluoropolymer. A short length of insulation, sufficient for a minimum of 100 turns of heating element, is removed from a conductor in order to allow contact with the heating element, which is helically wound evenly around the two conductors. The insulation is removed from only one conductor at each location and from alternate conductors at each adjacent location, to form a heating zone.

For full description please see the Annex.

SPECIFIC CONDITIONS OF USE: YES as shown below:
1. The following limiting temperatures for the end seals and splices shall not be exceeded:

   180°C continuous operation and 200°C intermittent operation for the E-150-F and CS-150-F
   230°C continuous operation, 260°C maximum exposure, -60°C minimum ambient and -60°C minimum installation for the E-50-F

2. The assembly of glands, splices and end terminations shall be carried out in accordance with the manufacturer's instructions.

3. The heating element supply circuit must include an electrical protection device in conformity with Clause 4.4 of IEC/IEEE 60079-30-1: 2015.

4. The minimum bending radii at specific temperatures for the FMT and FHT trace heating cables are shown in the table in the equipment description.

5. The supply to the heating unit must be terminated in a suitably certified terminal enclosure.

IECEx Certificate of Conformity

DETAILS OF CERTIFICATE CHANGES (for issues 1 and above)

Variation 2.1

The issue of this certificate permits existing information (for example on Certificate Schedule Drawings or label marking) to be updated to show the new name, no other changes may be made to the certified design. A technical review has not been undertaken, and the standards remain at the editions listed previously.

Report Number: None Project Number: 25/0112

Annex:

IECEx BAS 20.0007X Annex.pdf

The conductors and heating element are covered by a layer of insulation tape and then a primary jacket of 0.35mm minimum thickness fluoropolymer, which itself is covered by a nickel-plated copper braid. A further layer of insulation tape is provided, followed by an outer jacket of 0.4mm minimum thickness fluoropolymer.

There are 4 different power ratings available, identified as shown below:

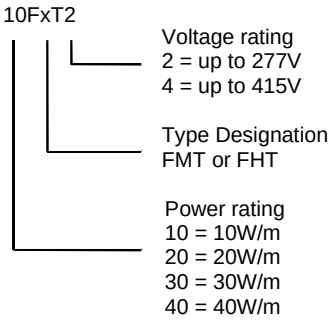

The declared maximum withstand temperatures for the types FMT and FHT are 200°C and 260°C respectively, and the minimum installation temperatures are -40°C and -60°C respectively.

Temperature Class

Any of the products in the range may be considered as part of a stabilised design system. In such a system the design is based on the use of nVent proprietary software Trace calc Pro. The algorithm defined in this software may be used in additional software. The designs may carry temperature classes other than T2 and are marked with the actual maximum temperature and appropriate T class in parenthesis.
The following accessories can be used as part of the complete heating system:

END SEALS

The end seals for terminating the remote end of the cable may be the following types:

Type E-50-F, which comprises hot melt adhesive liners with separate heat shrink sleeves.

Type E-150-F, which comprises a compound filled fluoropolymer housing.

SPLICES AND JOINTS

The following splicing and jointing arrangements are provided:

Type CS-150-F, which comprises a compound filled fluoropolymer housing.

POWER CONNECTIONS

Power connection may be achieved by the following means:

Type C20-01-F covered by Certificates IECEx PTB 11.0019X and coded Ex eb IIC Gb.

The minimum bending radii for FMT and FHT trace heating cables at specific temperatures are shown in the table below:

Temperature, T (°C)	Minimum Bending Radius (mm)
-60 ≤ T < -20	25
-20 ≤ T < -10	20
-10 ≤ T < +10	15
T ≥ +10	12