EU - TYPE EXAMINATION CERTIFICATE

Equipment or Protective System Intended for use in Potentially Explosive Atmospheres Directive 2014/34/EU

3	EU - Type Examination Certificate Number:	**SGS20ATEX0044X – Issue 2**
4	Product:	**FMT & FHT Trace Heating Systems**
5	Manufacturer:	**Chemelex Belgium NV**
6	Address:	**Romeinse straat 14, 3001 Leuven, Belgium**

7 This re-issued certificate extends EU Type Examination Certificate No. **SGS20ATEX0044X** to apply to product designed and constructed in accordance with the specification set out in the Schedule of the said certificate but having any variations specified in the Schedule attached to this certificate and the documents therein referred to.

8 SGS Fimko Oy, Notified Body number 0598, in accordance with Article 17 of Directive 2014/34/EU of the European Parliament and of the Council, dated 26 February 2014, certifies that this product has been found to comply with the Essential Health and Safety Requirements relating to the design and construction of products intended for use in potentially explosive atmospheres given in Annex II to the Directive.

The examination and test results are recorded in confidential Report No. **See Certificate History**

9 Compliance with the Essential Health and Safety Requirements has been assured by compliance with:

EN IEC 60079-0:2018 EN 60079-30-1:2017

except in respect of those requirements listed at item 18 of the Schedule.
This certificate issue is for the sole purpose of recording a change to the certificate holder's name/address. A technical review has not been undertaken and the standards remain at the editions listed previously.

10 If the sign "X" is placed after the certificate number, it indicates that the product is subject to the Specific Conditions of Use specified in the schedule to this certificate.

11 This EU - TYPE EXAMINATION CERTIFICATE relates only to the design and construction of the specified product. Further requirements of the Directive apply to the manufacturing process and supply of this product. These are not covered by this certificate.

12 The marking of the product shall include the following :

Ⓔx II 2 GD Ex 60079-30-1 IIC T* Gb FMT: Tmin-40°C FHT: Tmin-60°C
Ex 60079-30-1 IIIC T°C Db (*/** see schedule)**

SGS Fimko Oy Customer Reference No. **5034** Project File No. **25/0112**

This document is issued by the Company subject to their General Conditions for Certification Services accessible at http://www.sgs.com/en/Terms-and-Conditions.aspx . Attention is drawn to the limitation of liability, indemnification and jurisdiction issues defined therein. Any holder of this document is advised that information contained herein reflects the Company's findings at the time of their intervention only and within the limits of Client's instructions, if any. It does not necessarily indicate that the equipment may be used in particular industries or circumstances. The Company's sole responsibility is to its Client and this document does not exonerate parties to a transaction from exercising all their rights and obligations under the transaction documents. This document cannot be reproduced except in full, schedule included, without prior written approval of the Company. Any unauthorized alteration, forgery or falsification of the content or appearance of this document is unlawful and offenders may be prosecuted to the fullest extent of the law.

SGS Fimko Oy
Takomotie 8
FI-00380 Helsinki, Finland
Telephone +358 9 696 361
www.sgs.com
Business ID 0634247-4 Member of the SGS Group (SGS SA)

FINAS
Finnish Accreditation Service
S003 (EN ISO/IEC 17065)

Mikko Välimäki
SGS Fimko Oy

13 # Schedule

14 ## Certificate Number SGS20ATEX0044X – Issue 2

15 Description of Product

The FMT and FHT Trace Heating Systems are parallel circuit constant power density heating cables, rated at up to 415V, with nominal power outputs from 10W/m to 40W/m. The maximum maintain temperature for the types FMT and FHT are 150°C and 230°C respectively.

The heating cables consist of two stranded nickel-plated copper 1.5mm^2 conductors, each insulated with 0.4mm minimum thickness fluoropolymer. A short length of insulation, sufficient for a minimum of 100 turns of heating element, is removed from a conductor in order to allow contact with the heating element, which is helically wound evenly around the two conductors. The insulation is removed from only one conductor at each location and from alternate conductors at each adjacent location, to form a heating zone.

The conductors and heating element are covered by a layer of insulation tape and then a primary jacket of 0.35mm minimum thickness fluoropolymer, which itself is covered by a nickel-plated copper braid. A further layer of insulation tape is provided, followed by an outer jacket of 0.4mm minimum thickness fluoropolymer.

There are 4 different power ratings available, identified as shown below:

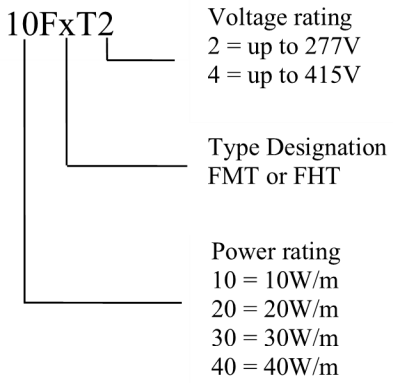

The declared maximum withstand temperatures for the types FMT and FHT are 200°C and 260°C respectively, and the minimum installation temperatures are -40°C and -60°C respectively.

Temperature Class

Any of the products in the range may be considered as part of a stabilised design system. In such a system the design is based on the use of nVent proprietary software Trace calc Pro. The algorithm defined in this software may be used in additional software. The designs may carry temperature classes other than T2 and are marked with the actual maximum temperature and appropriate T class in parenthesis.

The following accessories can be used as part of the complete heating system:

END SEALS

The end seals for terminating the remote end of the cable may be the following types:

Type E-50-F, which comprises hot melt adhesive liners with separate heat shrink sleeves.

Type E-150-F, which comprises a compound filled fluoropolymer housing.

SPLICES AND JOINTS

The following splicing and jointing arrangements are provided:

Type CS-150-F, which comprises a compound filled fluoropolymer housing.

POWER CONNECTIONS

Power connection may be achieved by the following means:

Type C20-01-F covered by Certificate PTB11ATEX1007X and coded Ex eb IIC Gb.

The minimum bending radii for FMT and FHT trace heating cables at specific temperatures are shown in the table below:

Temperature, T (°C)	Minimum Bending Radius (mm)
$-60 \leq T < -20$	25
$-20 \leq T < -10$	20
$-10 \leq T < +10$	15
$T \geq +10$	12

16 Report Number

See Certificate History.

17 Specific Conditions of Use

1. The following limiting temperatures for the end seals and splices shall not be exceeded:
2. 180°C continuous operation and 200°C intermittent operation for the E-150-F and CS-150-F
3. 230°C continuous operation, 260°C maximum exposure, -60°C minimum ambient and -60°C minimum installation for the E-50-F
4. The assembly of glands, splices and end terminations shall be carried out in accordance with the manufacturer's instructions.
5. The heating element supply circuit must include an electrical protection device in conformity with Clause 4.4 of EN 60079-30-1:2017.
6. The minimum bending radii at specific temperatures for the FMT and FHT trace heating cables are shown in the table in the equipment description.
7. The supply to the heating unit must be terminated in a suitably certified terminal enclosure.

18 Essential Health and Safety Requirements

In addition to the Essential Health and Safety Requirements (EHSRs) covered by the standards listed at item 9, the following are considered relevant to this product, and conformity is demonstrated in the report:

Clause	Subject
1.2.7	LVD type requirements
1.2.8	Overloading of equipment (protection relays, etc.)
1.4.1	External effects
1.4.2	Aggressive substances, etc.

19 Drawings and Documents

New drawings submitted for this issue of certificate:

None

Current drawings which remain unaffected by this issue:

Number	Sheet	Issue	Date	Description
K-20080221-02.00*	1 & 2	G	30/05/2024	LAB-EX-FxT Label
K-20080425-01*	1 of 1	2	01/18/2024	CS-150-F Body HARD-PTFE-0602601103-G
K-20080425-02*	1 of 1	2	19.01.2024	E-150-F Approval Markings
K-20080117-02*	1 of 1	4	01/19/2024	Generic Print String Dwg for FMT and FHT Heating Cables
K-20080221-01.00	1 of 1	D	30/04/2020	FMT and FHT Cable Construction
K-20080117-01.000	1 of 1	2	12/03/2008	CS-150-F Construction
K-20080117-04.000	1 of 1	B	28/05/2020	CS-150-F Spacer
K-20080122-01	1 of 1	A	4/23/20	CS-150-F Heater Preparation
K-20080122-02.000	1 of 1	D	29/04/2020	E-150-F Construction
K-20080122-07	1 of 1	A	4/23/20	E-150-F Heater Preparation
K-20060904-01	1 of 1	2	10/6/20	E-50-F
K-20060904-02	1 of 1	3	4/27/20	C20-01-F
K-20080221-03.00	1 of 1	3	4/27/20	FMT and FHT Heater Units

*These drawings are common to BAS21UKEX0514X

All drawings are common to IECEx BAS 20.0007X

20 Certificate History

Certificate No.	Date	Comments
SGS20ATEX0044X	13 October 2020	The release of the prime certificate. The associated test and assessment against the requirements of EN IEC 60079-0:2018 and EN 60079-30-1:2017 is documented in Test Report No. GB/BAS/ExTR20.0027/00.
SGS20ATEX0044X Issue 1	4 June 2024	To amend the nameplates to accommodate UKEX certificate numbers. Certification report GB/SGS/ExTR24.0068/00 refers.
SGS20ATEX0044X Issue 2	19 November 2025	The issue of this certificate permits existing information (for example on Certificate Schedule Drawings or label marking) to be updated to show the new name, no other changes may be made to the certified design. A technical review has not been undertaken, and the standards remain at the editions listed previously. Report Number: None Project Number: 25/0112
For drawings applicable to each issue, see original of that issue.		