IECEx Certificate of Conformity

INTERNATIONAL ELECTROTECHNICAL COMMISSION
IEC Certification System for Explosive Atmospheres

for rules and details of the IECEx Scheme visit www.iecex.com

Certificate No.:	**IECEx BAS 20.0013X**	Page 1 of 4	Certificate history:
Status:	**Current**	Issue No: 3	Issue 2 (2021-07-12) Issue 1 (2021-02-16) Issue 0 (2020-10-26)
Date of Issue:	2025-12-11		
Applicant:	**Chemelex LLC** 899 Broadway St. Redwood City CA 94063 **United States of America**		
Equipment:	**QTVR Range of Self-Regulating Trace Heating Systems**		
Optional accessory:			
Type of Protection:	**Electrical resistance – Trace Heating, Increased Safety, Encapsulation, Dust Ingress Protection**		
Marking:	**Ex 60079-30-1 eb IIC T4 Gb Ex 60079-30-1 tb IIIC T130°C Db** **or** **Ex 60079-30-1 eb mb IIC T4 Gb Ex 60079-30-1 mb tb IIIC T130°C Db** **Tmin -60°C**		

Approved for issue on behalf of the IECEx Certification Body: **D Brearley**

Position: **Lead Certification Engineer**

Signature: (for printed version)

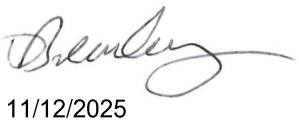

Date: (for printed version) 11/12/2025

1. This certificate and schedule may only be reproduced in full.
2. This certificate is not transferable and remains the property of the issuing body.
3. The Status and authenticity of this certificate may be verified by visiting www.iecex.com or use of this QR Code.

Certificate issued by:

SGS UK Limited
Rockhead Business Park
Staden Lane
Buxton, Derbyshire SK17 9RZ
United Kingdom

IECEx Certificate of Conformity

Manufacturer: **Chemelex LLC**
899 Broadway St.
Redwood City CA 94063
United States of America

Manufacturing locations: **Chemelex LLC**
899 Broadway St.
Redwood City CA 94063
United States of America

This certificate is issued as verification that a sample(s), representative of production, was assessed and tested and found to comply with the IEC Standard list below and that the manufacturer's quality system, relating to the Ex products covered by this certificate, was assessed and found to comply with the IECEx Quality system requirements.This certificate is granted subject to the conditions as set out in IECEx Scheme Rules, IECEx 02 and Operational Documents as amended

STANDARDS :
The equipment and any acceptable variations to it specified in the schedule of this certificate and the identified documents, was found to comply with the following standards

IEC 60079-0:2017 Edition:7.0	Explosive atmospheres - Part 0: Equipment - General requirements
IEC 60079-18:2017 Edition:4.1	Explosive atmospheres - Part 18: Protection by encapsulation "m"
IEC 60079-31:2013 Edition:2	Explosive atmospheres - Part 31: Equipment dust ignition protection by enclosure "t"
IEC 60079-7:2017 Edition:5.1	Explosive atmospheres - Part 7: Equipment protection by increased safety "e"
IEC/IEEE 60079-30-1:2015 Edition:1.0	Explosive atmospheres - Part 30-1: Electrical resistance trace heating - General and testing requirements

This Certificate **does not** indicate compliance with safety and performance requirements other than those expressly included in the Standards listed above.

TEST & ASSESSMENT REPORTS:
A sample(s) of the equipment listed has successfully met the examination and test requirements as recorded in:

Test Reports:

GB/BAS/ExTR20.0031/00
GB/BAS/ExTR21.0006/00
GB/BAS/ExTR21.0060/00
GB/SGS/ExTR24.0119/00

Quality Assessment Report:

GB/BAS/QAR06.0030/11

IECEx Certificate of Conformity

EQUIPMENT:
Equipment and systems covered by this Certificate are as follows:

The QTVR Range of Self-Regulating Trace Heating Systems is of the parallel circuit self-regulating type, rated at up to 277V, with power output up to 66W/m (20W/ft). The units have a maximum self-limiting temperature of 130°C. The systems are also suitable for applications at lower temperatures when used as part of a stabilised design. The limiting temperatures of the end seals, splices and power connections must be observed as part of the self-limiting or stabilised design.

Each trace heating system comprises:

- the active heating cable.

- an end seal for terminating the remote end of the unit.

- a cable gland for connecting the powered end of the unit to a suitable terminal enclosure, or alternative integrated power connection systems.

For full description please see Annex.

SPECIFIC CONDITIONS OF USE: YES as shown below:
1. The following limiting temperature for the end seals and splices shall not be exceeded:

+110°C for the S-20 and E-20
+150°C for the C-150-E, S-150 and E-150

2. The end seals, splices and power connections have the following associated ambient temperature ranges:

-60°C to +56°C for the E-20 and S-20
-55°C to +56°C for the T-100, JBM-100, JBS-100, JBU-100 and E-100
-40°C to +56°C for the JBS-100-L, JBM-100-L and JBU-100-L
-55°C to +55°C for the C-150-E, S-150 and E-150
-40°C to +40°C for the E-100-L
-55°C to +110°C for the C25-21 and C25-100
-60°C to +180°C for the C25-100-Metal / C3/4-100-Metal / C25-100-Metal-NP / C3/4-100-Metal-NP / C25-100-Metal-SS

3. The assembly of glands, splices and end terminations shall be carried out in accordance with the manufacturer's instructions.

4. The heating element supply circuit must include an electrical protection device in conformity with Clause 4.4 of IEC 60079-30-1.

5. The minimum installation temperature is -60°C. The minimum bending radii at specific temperatures for the Type QTVR units are shown in the table in the equipment description.

6. The supply to the heating unit must be terminated in a suitably certified terminal enclosure.

7. The minimum installation temperature for E-20 and S-20, end seal and splice is -20°C.

8. The installer is to carry out a dielectric strength test on Ex equipment in which the C25-21, C25-100 and C25-100-Metal / C3/4-100-Metal / C25-100-Metal-NP / C3/4-100-Metal-NP / C25-100-Metal-SS connection kit is fitted. No dielectric breakdown shall occur. (Alternatively, an insulation resistance test may be undertaken in accordance with IEC 60079-30-2).

IECEx Certificate of Conformity

DETAILS OF CERTIFICATE CHANGES (for issues 1 and above)

Variation 3.1

To amend the nameplates to accommodate UKEX certificate numbers

Variation 3.2

To change the manufacturers name.

ExTR: **GB/SGS/ExTR24.0119/00**	File Reference: **23/0333**

Annex:

IECEx BAS 20.0013X Annex Issue 1.pdf

The active heating cable comprises two stranded copper conductors around which is extruded a semi-conductive core material. This core material increases in resistance with increasing temperature and gives the cable its self-limiting property. This semi conductive core with embedded conductors forms the active part of the heating cable. An extruded layer of fluoropolymer serves to insulate the semi conductive core from the conductive covering, covering the active heater. A protective anti-corrosion fluoropolymer sheath may be extruded over the conductive covering.

The declared maximum withstand temperature for the range is 135°C and the minimum installation temperature is -60°C.

CABLE ACCESSORIES

END SEALS

The end seals for terminating the remote end of the unit may be the following types:

Types E-100-L or E-100, which are mechanical end seals incorporating an end cap which is filled with silicone grease sealant covered by certificates IECEx SIR 14.0007X and IECEx PTB 09.0038U.

Types E-100-L-A or E-100-A, which are mechanical end seals incorporating an end cap which is filled with silicone grease sealant.

A Raychem Type E-20 heat shrink end seal kit.

Type E-150 mechanical end seals, covered by certificate IECEx DEK 20.0005U.

SPLICES AND JOINTS

The following splicing and jointing arrangements are provided:

A Raychem Type S-20 heat shrink splice kit for connecting lengths of active heating cable.

A Raychem T-100 tee connection system, certificate IECEx PTB 20.0014U, for connecting up to three heater cables.

Type S-150 mechanical splice kit, covered by certificate IECEx DEK 20.0005U.

POWER CONNECTIONS

Power connection may be achieved by the following means:

Connection Type	IECEx Certificate
JBM-100	IECEx PTB 20.0014U
JBS-100	IECEx PTB 20.0014U
JBU-100	IECEx PTB 20.0014U
C-150-E	IECEx DEK 20.0005U
C25-21 Connection Kit	IECEx BAS 16.0040U
C25-100 Connection Kit	IECEx BAS 16.0041U
C25-100-Metal / C3/4-100-Metal / C25-100-Metal-NP / C3/4-100-Metal-NP / C25-100-Metal-SS Kits	IECEx BAS 16.0042U

The C25-100-Metal / C3/4-100-Metal / C25-100-Metal-NP / C3/4-100-Metal-NP / C25-100-Metal-SS Kits include M25 or ¾ NPT gland to IECEx SIR 05.0020X and core sealer to IECEx BAS 15.0137U.

A number of power levels and voltages, up to the maximum specified, are included in the range. They are identified in the following manner:

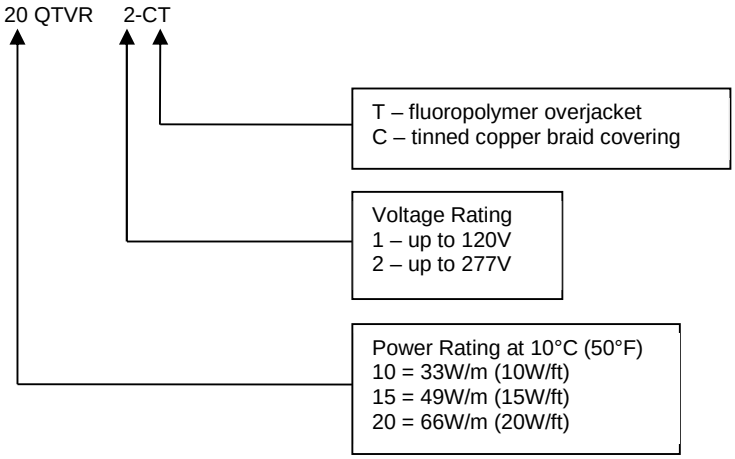

TEMPERATURE CLASS

The self-limiting QTVR trace heating cable has a temperature class of T4.
Any of the products in the range may be considered as part of a stabilised design system. In such a system the design is based upon the use of nVent proprietary software Trace calc Pro. The algorithm defined in this software may be used in additional design software. These designs may carry temperature classes other than the T4 described above and are marked with the actual maximum temperature and the appropriate T class in parenthesis.

The minimum bending radii for QTVR trace heating cable at specific temperatures are shown in the table below:

Temperature, T (°C)	Minimum Bending Radius (mm)
-60 ≤ T < -20	35
-20 ≤ T < -10	30
-10 ≤ T < 0	25
0 ≤ T < +10	20
T ≥ +10	12