IECEx Certificate of Conformity

INTERNATIONAL ELECTROTECHNICAL COMMISSION
IEC Certification System for Explosive Atmospheres

for rules and details of the IECEx Scheme visit www.iecex.com

Certificate No.:	**IECEx BAS 20.0008X**	Page 1 of 4	Certificate history:
Status:	**Current**	Issue No: 4	Issue 3 (2023-10-26) Issue 2 (2021-07-12) Issue 1 (2021-02-16) Issue 0 (2020-10-20)
Date of Issue:	2025-12-11		

Applicant: **Chemelex LLC**
899 Broadway St.
Redwood City CA 94063
United States of America

Equipment: **VPL Range of Power-Limiting Trace Heating Systems**

Optional accessory:

Type of Protection: **Electrical resistance – Trace Heating, Increased Safety, Encapsulation, Dust Ingress Protection**

Marking: **Ex 60079-30-1 eb IIC T* Gb Ex 60079-30-1 tb IIIC IP66 T**°C Db**

or

Ex 60079-30-1 eb mb IIC T* Gb Ex 60079-30-1 mb tb IIIC IP66 T°C Db**
Tmin -60°C

(*see schedule)

Approved for issue on behalf of the IECEx Certification Body: **D Brearley**

Position: **Lead Certification Engineer**

Signature: (for printed version)



Date: (for printed version) 11/12/2025

1. This certificate and schedule may only be reproduced in full.
2. This certificate is not transferable and remains the property of the issuing body.
3. The Status and authenticity of this certificate may be verified by visiting www.iecex.com or use of this QR Code.

Certificate issued by:

SGS UK Limited
Rockhead Business Park
Staden Lane
Buxton, Derbyshire SK17 9RZ
United Kingdom

IECEx Certificate of Conformity

Certificate No.: **IECEx BAS 20.0008X** Page 2 of 4

Date of issue: 2025-12-11 Issue No: 4

Manufacturer: **Chemelex LLC**
899 Broadway St.
Redwood City CA 94063
United States of America

Manufacturing locations: **Chemelex LLC**
899 Broadway St.
Redwood City CA 94063
United States of America

This certificate is issued as verification that a sample(s), representative of production, was assessed and tested and found to comply with the IEC Standard list below and that the manufacturer's quality system, relating to the Ex products covered by this certificate, was assessed and found to comply with the IECEx Quality system requirements.This certificate is granted subject to the conditions as set out in IECEx Scheme Rules, IECEx 02 and Operational Documents as amended

STANDARDS :
The equipment and any acceptable variations to it specified in the schedule of this certificate and the identified documents, was found to comply with the following standards

IEC 60079-0:2017 Edition:7.0	Explosive atmospheres - Part 0: Equipment - General requirements
IEC 60079-18:2017 Edition:4.1	Explosive atmospheres - Part 18: Protection by encapsulation "m"
IEC 60079-31:2013 Edition:2	Explosive atmospheres - Part 31: Equipment dust ignition protection by enclosure "t"
IEC 60079-7:2017 Edition:5.1	Explosive atmospheres - Part 7: Equipment protection by increased safety "e"
IEC/IEEE 60079-30-1:2015 Edition:1.0	Explosive atmospheres - Part 30-1: Electrical resistance trace heating - General and testing requirements

This Certificate **does not** indicate compliance with safety and performance requirements other than those expressly included in the Standards listed above.

TEST & ASSESSMENT REPORTS:
A sample(s) of the equipment listed has successfully met the examination and test requirements as recorded in:

Test Reports:

GB/BAS/ExTR20.0028/00
GB/BAS/ExTR21.0007/00
GB/BAS/ExTR21.0060/00
GB/BAS/ExTR23.0065/00
GB/SGS/ExTR24.0119/00

Quality Assessment Report:

GB/BAS/QAR06.0030/11

IECEx Certificate of Conformity

EQUIPMENT:
Equipment and systems covered by this Certificate are as follows:

The VPL Range of Power-Limiting Trace Heating Systems is of the parallel circuit power limiting type, rated at up to 480V; with a nominal power output from 16 W/m to 66 W/m at 10°C and a maximum maintain temperature as detailed in the tables below. The systems are designed for use as part of a stabilised design. The limiting temperatures of the end seals, splices and power connections must be observed as part of the stabilised design.

Each trace heating system comprises:

- the active heating cable

- an end seal for terminating the remote end of the unit

- a cable gland for connecting the powered end of the unit to a suitable terminal enclosure, or alternative integrated power connection systems.

For full description please see Annex.

SPECIFIC CONDITIONS OF USE: YES as shown below:

1. The following limiting temperatures for the end seals, splices and power connections shall not be exceeded:

260°C for the E-40 and S-40
250°C for the JBU-100
165°C for the E-100, E-100-L and JBS-100
155°C for the JBM-100 and T-100
150°C for the C-150-E and E-150
110°C for the C25-21 and C25-100
180°C for the C25-100-Metal / C3/4-100-Metal

The E-100, E-100-L, JBM-100, JBS-100 and T-100 have limiting temperatures based on an internal component in these accessories. When located on a pipe or other work piece surface, a maximum pipe temperature of 250°C will not cause the limiting temperatures of 165°C or 155°C to be exceeded.

2. The end seals, splices and power connections have the following associated ambient temperatures:

-60°C to +56°C for the E-40 and S-40
-55°C to +56°C for the T-100, JBM-100, JBS-100, JBU-100 and E-100
-55°C to +55°C for the C-150-E and E-150
-40°C to +56°C for the JBS-100-L, JBM-100-L and JBU-100-L
-40°C to +40°C for the E-100-L
-55°C to +110°C for the C25-21 and C25-100
-60°C to +180°C for the C25-100-Metal / C3/4-100-Metal

3. The assembly of glands, splices and end terminations shall be carried out in accordance with the manufacturer's instructions.

4. The heating element supply circuit must include an electrical protection device in conformity with Clause 4.4 of IEC 60079-30-1.

5. The minimum installation temperature is -60°C. The minimum bending radii at specific temperatures for the Type VPL units are shown in the table in the equipment description.

6. The supply to the heating unit must be terminated in a suitably certified terminal enclosure.

7. The installer is to carry out a dielectric strength test on Ex equipment in which the C25-21, C25-100 and C25-100-Metal / C3/4-100-Metal connection kit is fitted. No dielectric breakdown shall occur. (Alternatively, an insulation resistance test may be undertaken in accordance with IEC 60079-30-2).

IECEx Certificate of Conformity

DETAILS OF CERTIFICATE CHANGES (for issues 1 and above)

Variation 4.1

To amend the nameplates to accommodate UKEX certificate numbers

Variation 4.2

To change the manufacturers name.

ExTR: **GB/SGS/ExTR24.0119/00**	File Reference: **23/0333**

Annex:

IECEx BAS 20.0008X Annex Issue 1.pdf

The heating cables consist of two fluoropolymer insulated nickel-plated copper 3.3 mm^2 conductors. Both bus wires are further contained within a fluoropolymer pairing jacket. A helical heating element is wound evenly around the pairing jacket. Alternating, a short length of insulation is removed from the pairing jacket and the bus wire to establish the electrical connection between the heating element and the conductor. An extruded layer of fluoropolymer covers the heating element which itself is covered by a conductive covering. A protective anti corrosion fluoropolymer sheath may be extruded over the conductive covering.

A primary 0.5mm thick fluoropolymer jacket covers the heating element which itself is covered by a steel or copper braid equivalent to a 3.31mm^2 conductor. The final outer jacket is another 0.5mm thick layer of fluoropolymer.

The resistance of the heating element changes as its surrounding temperature changes resulting in the power output of the heating cable reducing with increasing temperature.

The declared maximum withstand temperature for the range is 260°C and the minimum installation temperature is -60°C.

Heating Cable	Maximum maintain temperature (°C)	
	110V	220V
5VPL1 -CT	235	235
10VPL1 –CT	215	210
15VPL1 –CT	190	165
20VPL1 –CT	150	150

Heating Cable	Maximum maintain temperature (°C)			
	208V	230V	254V	277V
5VPL2 -CT	235	230	225	225
10VPL2 –CT	220	210	200	195
15VPL2 –CT	200	180	145	105
20VPL2 –CT	150	150	-	-

Heating Cable	Maximum maintain temperature (°C)	
	400V	480V
5VPL4 -CT	230	230
10VPL4 –CT	215	205
15VPL4 –CT	195	160
20VPL4 –CT	150	150

CABLE ACCESSORIES

END SEALS

The end seals for terminating the remote end of the unit may be the following types:

Types E-100-L or E-100, which are mechanical end seals incorporating an end cap which is filled with silicone grease sealant, covered by certificates IECEx SIR 14.0007X and IECEx PTB 09.0038U.

Types E-100-L-A or E-100-A, which are mechanical end seals incorporating an end cap which is filled with silicone grease sealant.

A Raychem Type E-40 heat shrink end seal kit.

Type E-150 mechanical end seals, covered by certificate IECEx DEK 20.0005U.

SPLICES AND JOINTS

The following splicing and jointing arrangements are provided:

A Raychem T-100 tee connection system, certificate IECEx PTB 20.0014U, for connecting up to three heater cables.

A Raychem Type S-40 heat shrink splice kit for connecting lengths of active heating cable.

POWER CONNECTIONS

Power connection may be achieved by the following means:

Connection Type	IECEx Certificate
T-100	IECEx PTB 20.0014U
JBM-100	IECEx PTB 20.0014U
JBS-100	IECEx PTB 20.0014U
E-100	IECEx PTB 09.0038U
E-100-L	IECEx SIR 14.0007X
JBU-100	IECEx PTB 20.0014U
C-150-E	IECEx DEK 20.0005U
C25-21	IECEx BAS 16.0040U
C25-100	IECEx BAS 16.0041U
C25-100-Metal C3/4-100-Metal C25-100-Metal-NP C3/4-100-Metal-NP C25-100-Metal-SS	IECEx BAS 16.0042U

The C25-100-Metal / C3/4-100-Metal / C25-100-Metal-NP / C3/4-100-Metal-NP / C25-100-Metal-SS Kits include M25 or ¾ NPT gland to IECEx SIR 05.0020X and core sealer to IECEx BAS 15.0137U.

A number of power levels and voltages, up to the maximum specified, are included in the range. They are identified in the following manner:

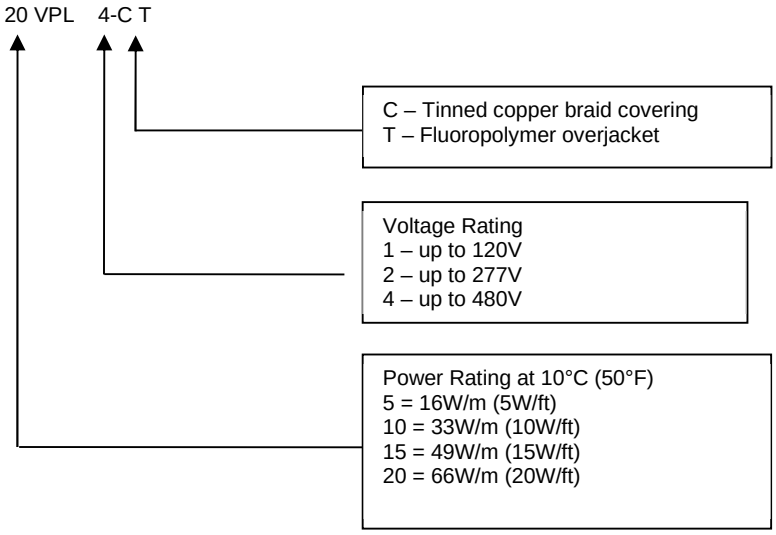

TEMPERATURE CLASS

Any of the products in the range may be considered as part of a stabilised design system. In such a system the design is based upon the use of nVent proprietary software Trace calc Pro. The algorithm defined in this software may be used in additional design software. These designs may carry temperature classes of T6 to T2 and are marked with the actual maximum temperature and the appropriate T class in parenthesis.

The minimum bending radii for VPL trace heating cable at specific temperatures are shown in the table below:

Temperature, T (°C)	Minimum Bending Radius (mm)
-60 ≤ T < -20	19
-20 ≤ T < +10	15
T ≥ +10	12